NO.	NAME	MATERIAL	FINISH
1	HOUSING	Nylon / LCP	
2	CONTACT	PHOS. BRONZE	Gold-Tin Plated
3	SHELL	BRASS	Ni Plated

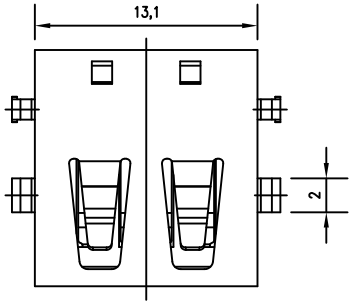

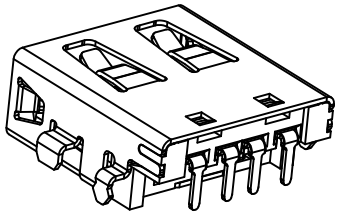

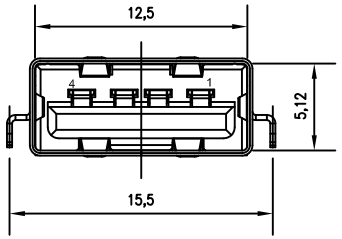

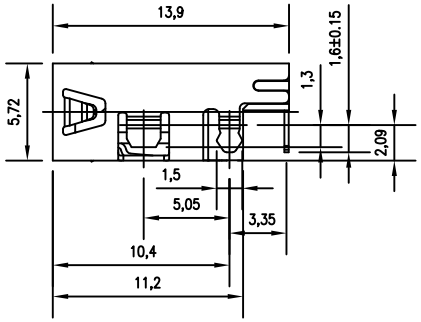

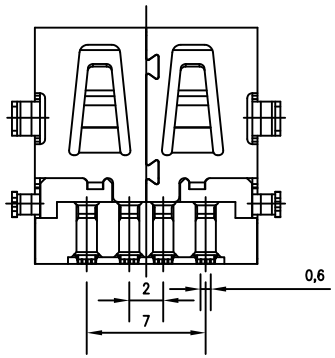

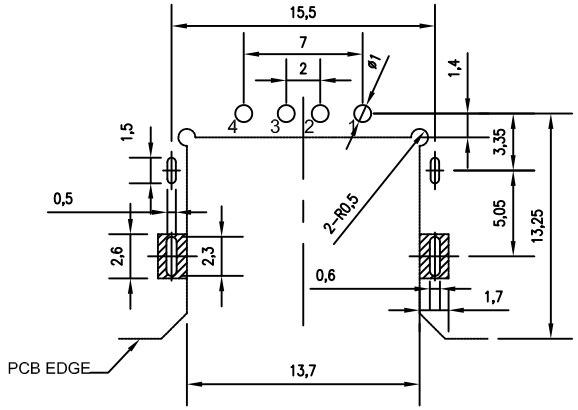

RECOMMENDED PCB LAYOUT
TOP VIEW

TUA-S10E5 ＊-＊＊＊

Series

Type

Housing Color
B : Black
W : White

Material
P : Nylon
L : Lcp

Version
1 : 1.1
2 : 2.0

Shell
N : Nickel Plated

SYM	DISCRIPTION	DATE	APPROVED
△			
△			
△			
△			
△			

TACLEX *TACLEX ELECTRONICS CO., LTD.*

TOLERANCES UNLESS OTHERWISE SPECIFIED
LINEAR: ±0.30 ANGULAR: ±3°

REVISIONS A

SCALE 5/1

SIGNATURES		DATE
DRAWN	Johnson	2011.5.20
CHK'D	Alex	2011.5.20
APPV'D	Rex	2011.5.20

TITLE: USB. TYPE A

NO. TUA-S10E5x-xxx