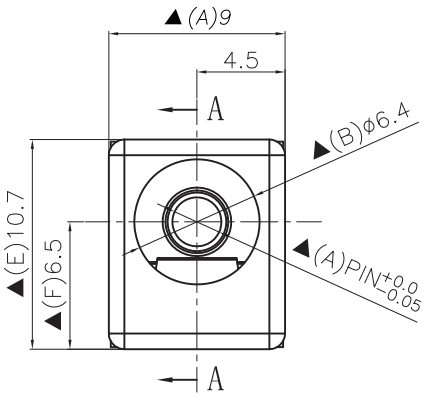

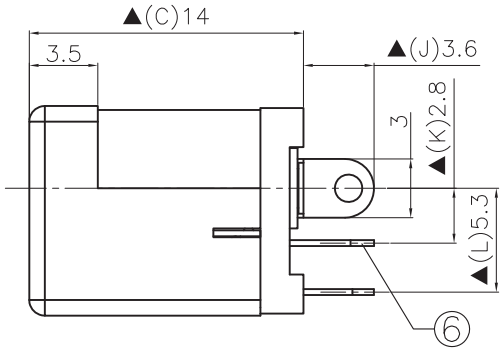

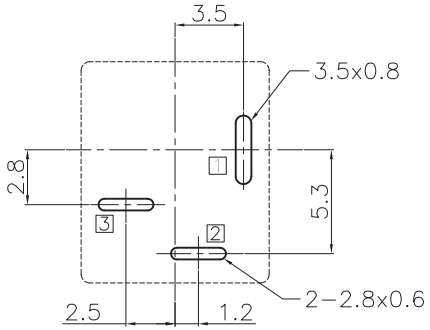

RECOMMENDED P.C.B. LAYOUT
UNSPECIFIED TOLERANCE: ±0.05
(COPPER-SIDED VIEW)

Ordering information:

TDJ-A103D- A _ _ _ 0A S 0 4
(1) (2)(3) (4) (5) (6)(7)(8)

(1):Series No.
(2):Schematic option: A
(3):Center pin diameter:
H=Ø2.0, I=Ø2.35, J=Ø2.5
(4):Material of housing:
PB=PBT 9T=PA9T
(5):Housing color:
Zero → 0A=Black
(6):Terminal plating:
S=Silver(Ag)
(7):Special option:
0=No special option
(8):Packing mode:
4=Bag packing

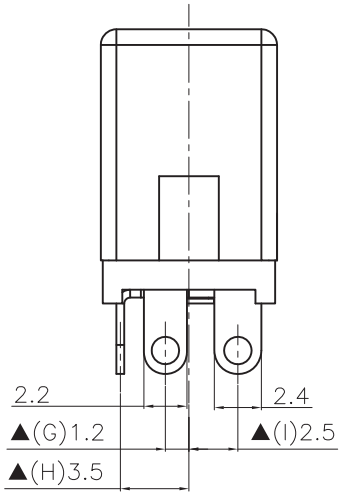

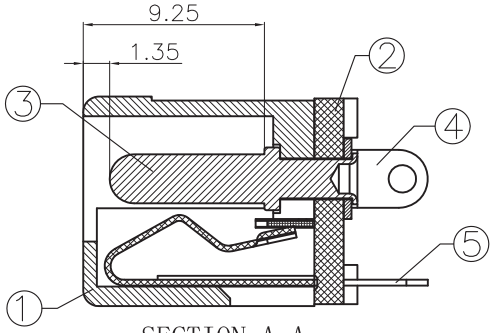

SECTION A-A

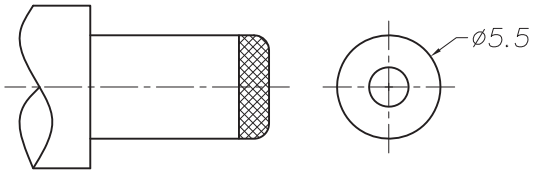

DC MATE PLUG

Model No.	TDJ-A103D-AH	TDJ-A103D-AI	TDJ-A103D-AJ
PIN	ϕ2.0	ϕ2.35	ϕ2.5

Specification:
1. Rating : DC 20V 3A;
2. Contact resistance: ≤30mΩ;
   After test: ≤50mΩ
3. Insulation resistance: ≥100MΩ (500VDC);
   After test: ≥50MΩ
4. Withstanding voltage: 500VAC ;
5. Insertion and extraction force: 3N~30N;
6. life test: 5000cycles min;
7. Operation temperature range: -20℃~70℃
8. Preservative temperature range: -40℃~85℃
9. Sign"▲ "is importance dimension。

TDJ-A103D-A

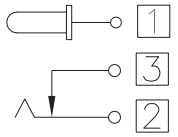

CIRCUIT DIAGRAM

□ : TERMINAL NO.

NO	DESCRIPTION	QTY	MATERIAL	PART NO	REMARK
⑥	Shunt terminal 3	1	Brass t0.3	DC0012D-03	Silver plating
⑤	Tip spring 2	1	Phosphor bronze t0.3	DC0012D-02	Silver plating
④	Center pin terminal 1	1	Brass t0.4	DC0012D-01	Silver plating
③	Center pin 1	1	Brass	DC00050-99H/I/J	Nickel plating
②	Cover	1	See P/N Info	DC0012D-S2	Black
①	Housing	1	See P/N Info	DC50060-S1	Black

SYM	DISCRIPTION	DATE	APPROVED
△			
△			
△			
△			
△			

TACLEX TACLEX ELECTRONICS CO., LTD.

TOLERANCES UNLESS OTHERWISE SPECIFIED
LINEAR: ±0.30 ANGULAR: ±3°

SIGNATURES		DATE
DRAWN	Alex	2008.11.05
CHK'D	Andy	2008.11.05
APPV'D	Rex	2008.11.05

TITLE: DC JACK

NO. TDJ-A103D

REVISIONS A

SCALE 5/1