REV.	ECN NO OR DESCRIPTION	REVISED	DATE
A	PROPOSE ONLY	ERIC	2018.02.08

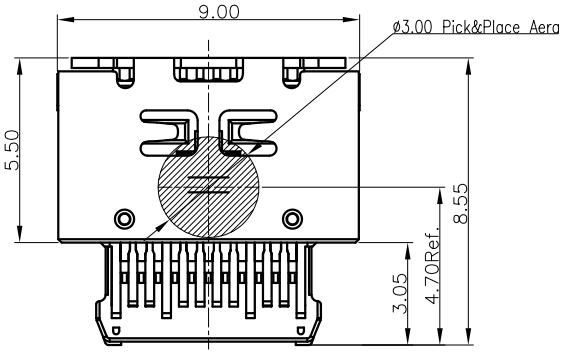

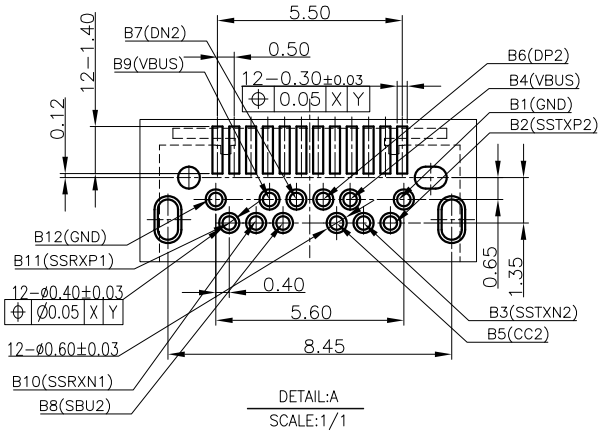

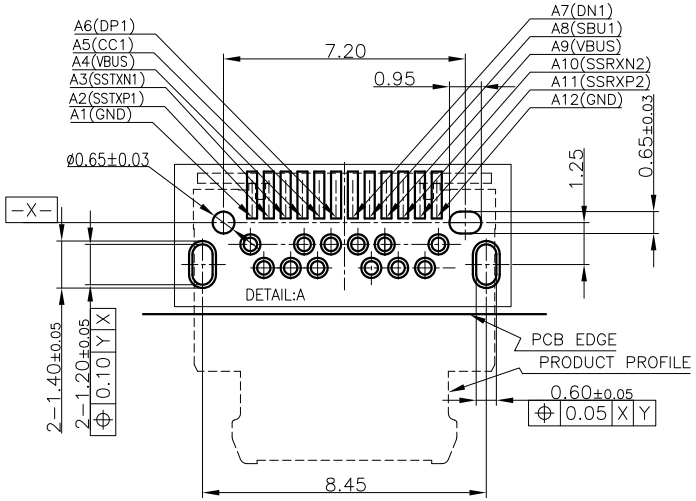

RECOMMENDED PCB LAYOUT(THICKNESS:0.80MM)
PWB TOLERANCE: ±0.05

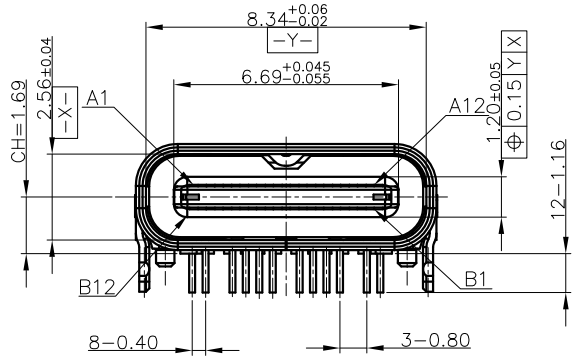

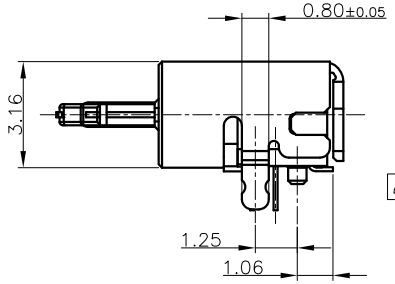

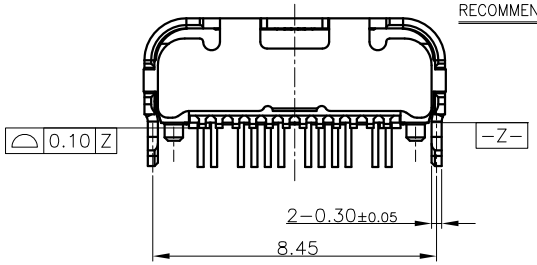

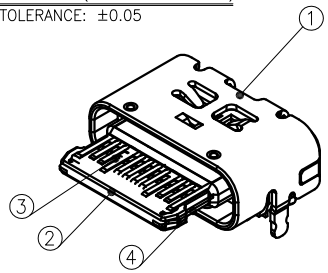

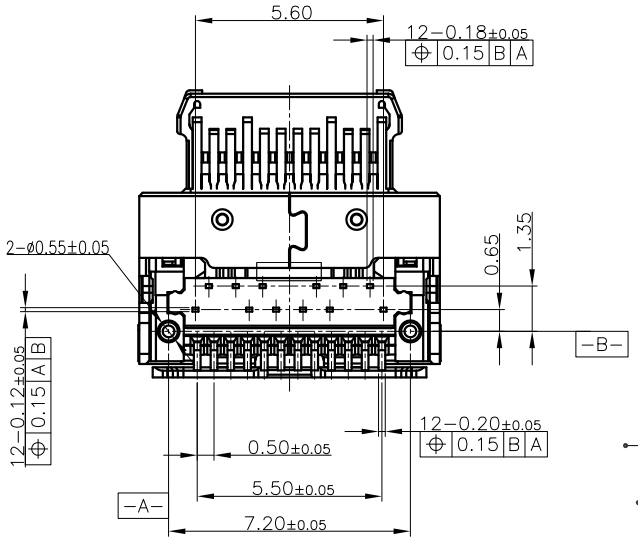

SPECIFICATION:

1.ELECTRICAL CHARACTERISTICS:

1.1 CURRENT RATING: 1.5A/Pin MAX(A4,A9,B4,B9)
1.25A/Pin MAX(A1,A12,B1,B12),0.25A(OHER PIN)
1.2 CONTACT RESISTANCE: 40 MILLIONHM MAX.
1.3 DIELECTRIC WITHSTANDING VOLTAGE: 100 VAC r.m.s
1.4 INSULATION RESISTNACE: 100 MEGOHMS MIN.

2.MECHANICAL CHARACTERISTICS
2.1 INSERTION FORCE: 5~20N
2.2 EXTRACTION FORCE: Initial:8~20N;Durability:6~20N(1000cycles);
2.3 DURABILITY:10,000CYCLES

3.ENVIRONMENTAL CHARACTERISTICS
3.1 TEMPERATURE RANGE: −40 °C ~ 85 °C
3.2. IR REFLOW:
THE PEAK TEMPERATURE ON THE BOARD SHALL BE MAINTAINED FOR 10 SECONDS AT 260°C.

4.PART NO.:

TUC 43-32 1 1 24 02-11

- TYPE.C CONN.
- Product Order
- 32:HEIGHT ON BOARD 3.2mm
- 1=BLACK HOUSING
- 1=WITH POST
- Pin NO. 24=24Pin
- 02=3u" Au Plating On Contact Aera
- 11= Servies NO.

Part NO. Detailed List

ITEM	P/N	COLOUR
1	TUC43−32112402−11	Black
2	TUC43−32112402−12	White

Item	Description	QTY.	Material	Finish
④	Plate	1	Stainless stell	Clean
③	Contact	24	Copper Alloy	Ni 50u" Min. overall, 5u"Min. plating at contact area, GF and termination.
②	Housing	1	LCP	Molded Color: White&Black
①	Shell	1	Stainless stell	Ni 10u" Min. overall, Gold flash at termination.

UNLESS OTHERWISE SPECIFED TOLERANCES

DECIMALS:		ANGLES:	
X	:±0.5	X	:±2°
X.X	:±0.30	X.X	:±1°
X.XX	:±0.20		
X.XXX	:±0.10		

TACLEX ELECTRONICS CO., LTD.

TITLE	Type.C 24PIN DIP+ SMT CONN. RECPTACLE			
DWN	chenjun	PART NO. TUC43−32112402−1X		
CHKD	chenjun	SCALE:1:1	UNIT: mm	
APVD	Kevin.d	SIZE: A4	SHEET:1OF1	REV: A
DRAW NO. C−DWG−TCR43−01			CUSTOMER COPY	