| REV. | ECN NO OR DESCRIPTION | REVISED | DATE |
|---|---|---|---|
| A | PROPOSE ONLY | ERIC | 2018.02.08 |

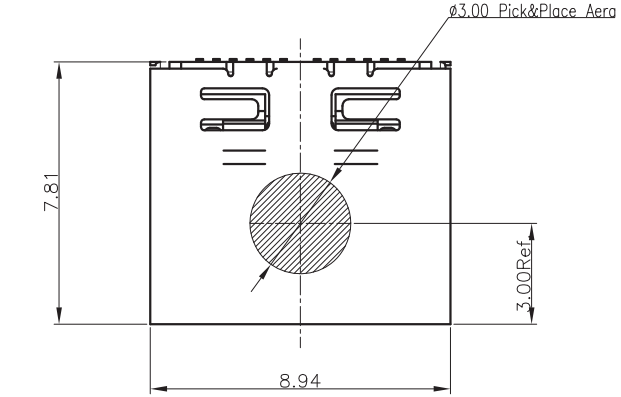


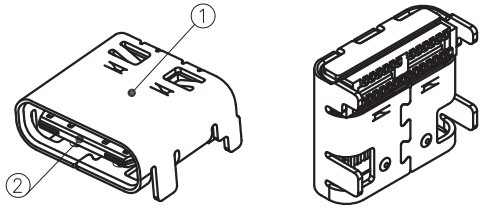


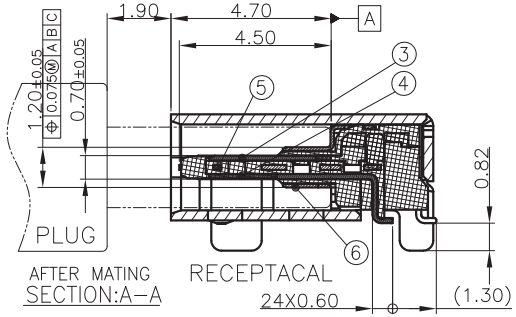


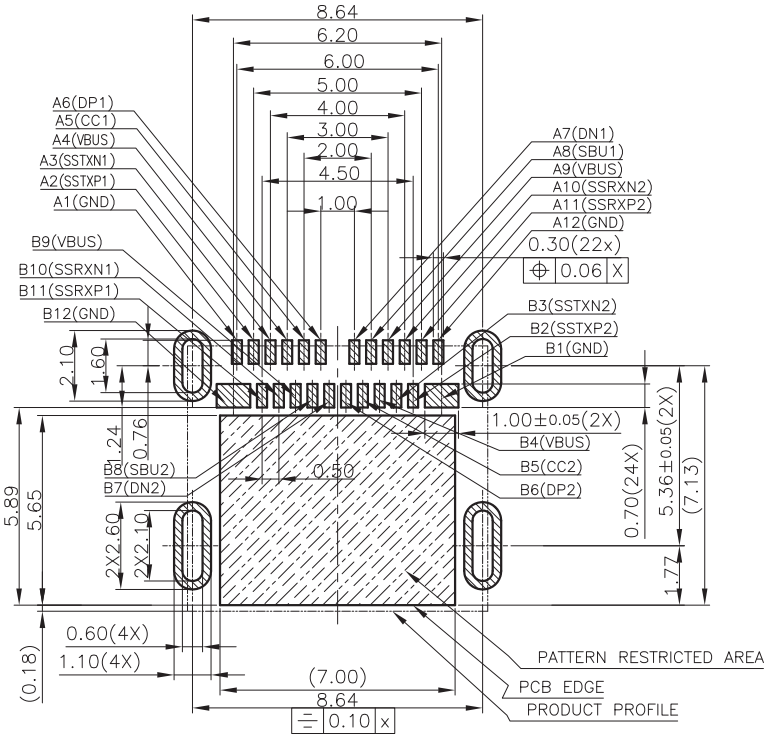


RECOMMENDED PCB LAYOUT(THICKNESS:0.80MM)
PWB TOLERANCE: ±0.05

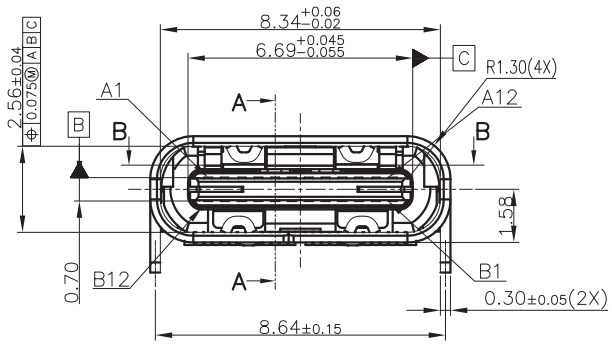


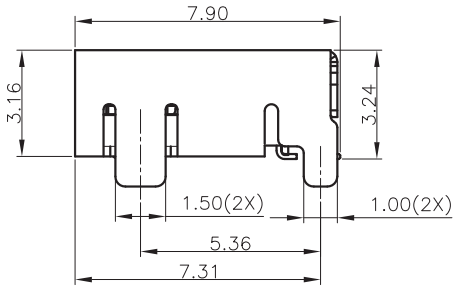


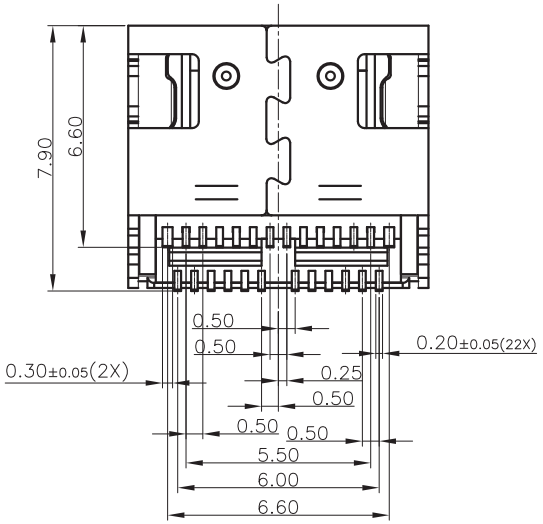


SPECIFICATION:

1.ELECTRICAL CHARACTERISTICS:

1.1 CURRENT RATING: 1.5A/Pin MAX(A4,A9,B4,B9)
1.25A/Pin MAX(A1,A12,B1,B12),0.25A(OHER PIN)
1.2 CONTACT RESISTANCE: 40 MILLIONHM MAX.
1.3 DIELECTRIC WITHSTANDING VOLTAGE: 100 VAC r.m.s
1.4 INSULATION RESISTNACE: 100 MEGOHMS MIN.

2.MECHANICAL CHARACTERISTICS
2.1 INSERTION FORCE: 5~20N
2.2 EXTRACTION FORCE: Initial:8~20N;Durability:6~20N(1000cycles);
2.3 DURABILITY:10,000CYCLES

3.ENVIRONMENTAL CHARACTERISTICS
3.1 TEMPERATURE RANGE: −40 ˚C ~ 85 ˚C
3.2. IR REFLOW:
THE PEAK TEMPERATURE ON THE BOARD SHALL BE MAINTAINED FOR 10 SECONDS AT 260˚C.

4.PART NO.:

TC R 39-32 1 2 24 02-11

- TC=TYPE.C CONN.
- R=RECPTACLE
- Product Order
- 32:HEIGHT ON BOARD 3.2mm
- 1=BLACK HOUSING
- 2=WITH OUT POST
- Pin NO. 24=24Pin
- 02=3u" Au Plating On Contact Aera
- 11= Servies NO.

| NO. | DESCRIPTION | QTY. | MATERIAL | FINISH |
|---|---|---|---|---|
| 6 | EMI SPRING | 1 PCS | STAINLESS STEEL | NO SURFACE TREATMENT |
| 5 | MID PLATE | 1 PCS | STAINLESS STEEL | NO SURFACE TREATMENT |
| 4 | CONTACT B | 1 SET | COPPER ALLOY | Ni 50u" MIN. UNDER PLATED OVER ALL. Au PLATED ON THE FUNCTIONAL AREA OF CONTACT. (GOLD PLATING THICKNESS FOLLOW THE P/N) PLATING SPECIFICATIONS OF THE SOLDER AREA FOLLOW THE P/N |
| 3 | CONTACT A | 1 SET | COPPER ALLOY | |
| 2 | HOUSING | 3 PCS | LCP | COLOR: BLACK |
| 1 | SHELL | 1 PCS | STAINLESS STEEL | Ni 30u" MIN. UNDER PLATED OVER ALL. |

UNLESS OTHERWISE SPECIFED TOLERANCES

DECIMALS:
X :±0.5
X.X :±0.30
X.XX :±0.20
X.XXX :±0.10

ANGLES:
X :±2°
X.X :±1°

TACLEX ELECTRONICS CO., LTD.

| | | | | |
|---|---|---|---|---|
| TITLE | Type.C 24PIN Dull SMT CONN. RECPTACLE | | | |
| DWN | chenjun | PART NO. TCR39-32122402-11 | | |
| CHKD | chenjun | SCALE:1:1 | UNIT: mm | |
| APVD | Kevin.d | SIZE: A4 | SHEET:1OF1 | REV: A |
| DRAW NO. C-DWG-TCR04-01 | | | CUSTOMER COPY | |

Pb Process Capable | RoHS Compliant 2011/65/EU | HF Compliant Halogen Free

| REV. | ECN NO OR DESCRIPTION | REVISED | DATE |
|---|---|---|---|
| A | PROPOSE ONLY | ERIC | 2018.02.08 |

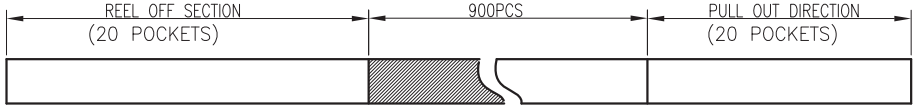


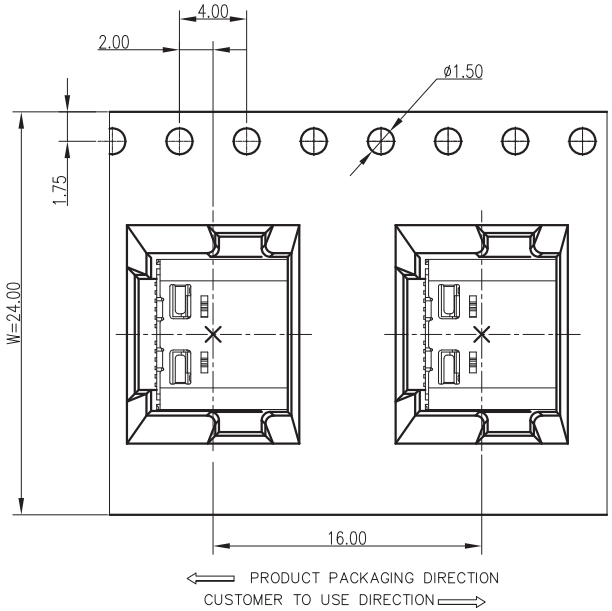


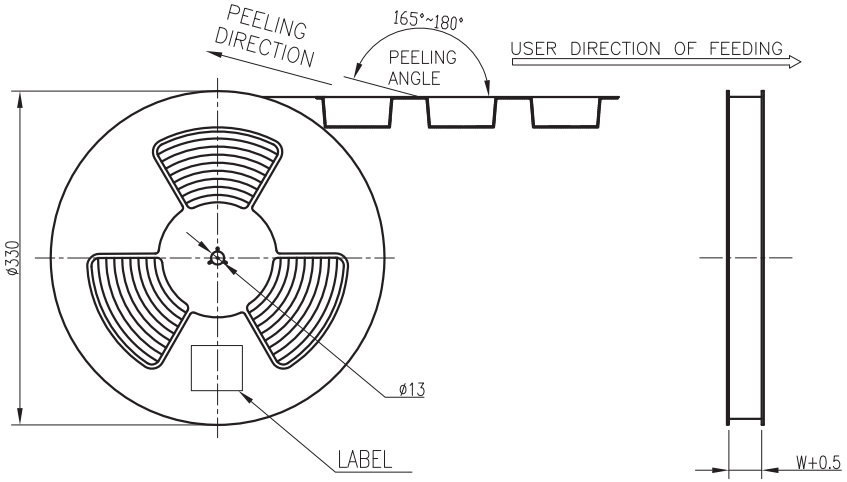


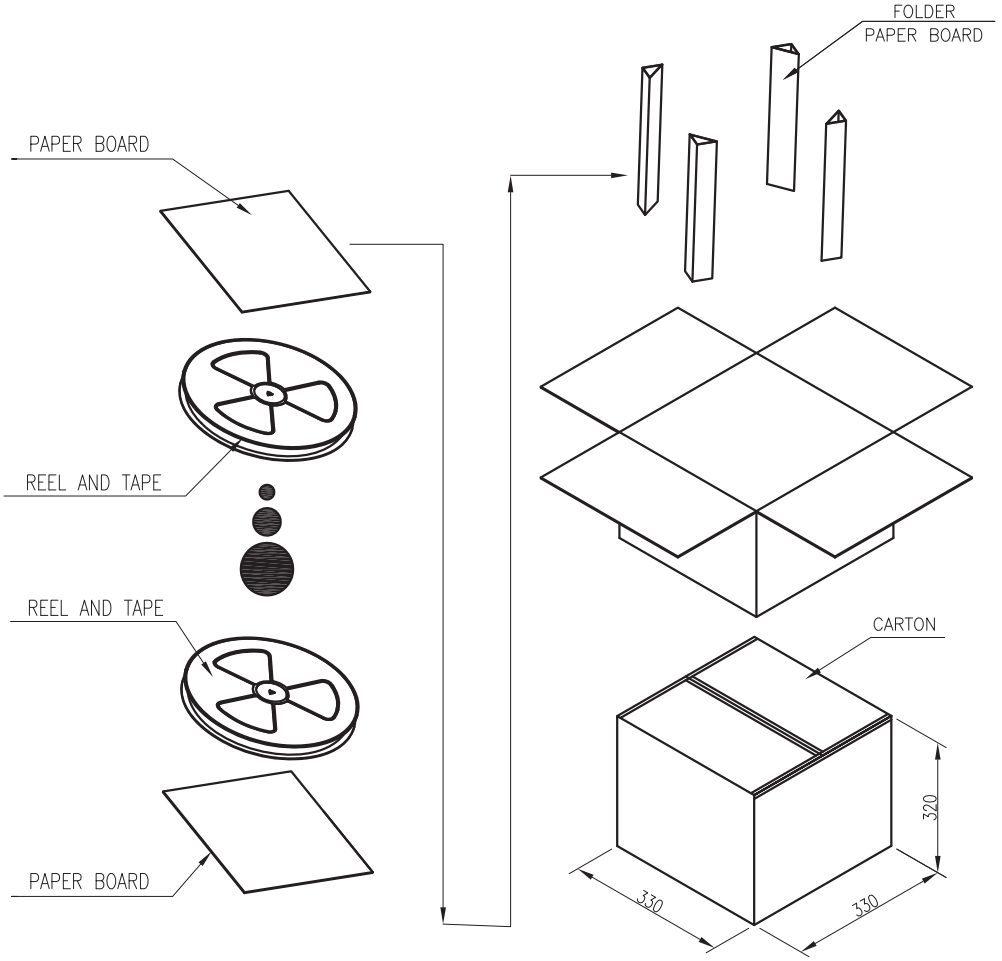


| CONN. PART NO. | CONN. QTY./REEL | REEL QTY./CARTON | CONN. QTY./CARTON |
|---|---|---|---|
| TCR39-32122402-11 | 900 | 10 | 9000 PCS |

UNLESS OTHERWISE SPECIFED TOLERANCES

DECIMALS:
X :±0.5
X.X :±0.30
X.XX :±0.20
X.XXX :±0.10

ANGLES:
X :±2°
X.X :±1°

TACLEX ELECTRONICS CO., LTD.

| | | | | |
|---|---|---|---|---|
| TITLE | Type.C 24PIN Dull SMT CONN. RECPTACLE | | | |
| DWN | chenjun | PART NO. TCR39-32122402-11 | | |
| CHKD | chenjun | SCALE:1:1 | UNIT: mm | |
| APVD | Kevin.d | SIZE: A4 | SHEET:1OF1 | REV: A |
| DRAW NO. C-DWG-TCR04-01 | | | CUSTOMER COPY | |